Horton Bearing Services

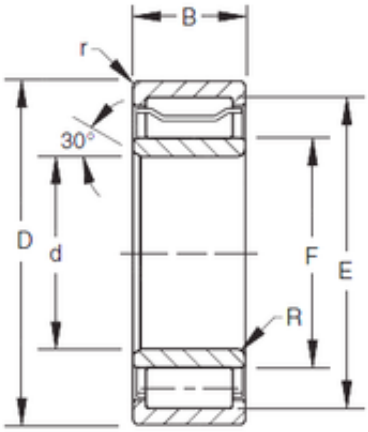

A-5224-WS Bearing 2D drawings and 3D CAD models

Bearing A-5224-WS

Bearing No. A-5224-WS

Bore Diameter	120 mm
Outer Diameter	197 mm
d	120 mm
F	144 mm
D	215 mm
E	197 mm
B	76,2 mm
C	76,2 mm
R	4,8 mm
r	2 mm